FURNACE CAMERA

SPECIFICATIONS

Materials: Camera housing and fastening tube is manufactured in stainless steel.

Weight: 18kg.

Dimensions: Camera housing: L450XD129mm
Fastening tube: L450xD132mm

Temperature: 1 500°C in the furnace.

Cooling: Water and air Air=instrument air.

Flew of cooling water is to be dimensioned so that outlet water is kept around 35°C.

Others: Camera housing can be manufactured in other dimensions and materials.

Installation: A hole is to be made in the furnace wall at a suitable spot. The hole is matched to fastening tube with a diameter of 132mm. Generally the fastening tube is mounted aligned with the inner wall of the furnace. The fastening tube is fixed in the furnace wall by means of ceramic materials/bolted or welded etc.

Alternatively the furnace camera house can be mounted outside the wall. Thus it has to be mounted on a special frame.

PICTURE

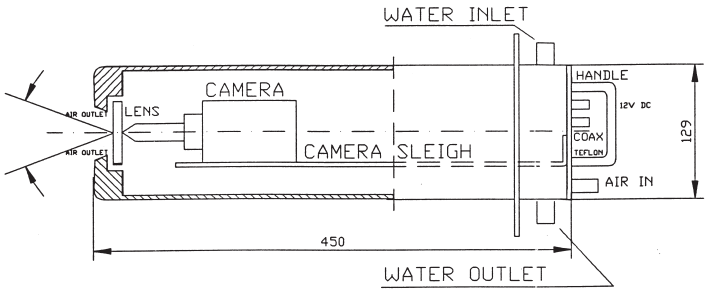

CAMERA HOUSING

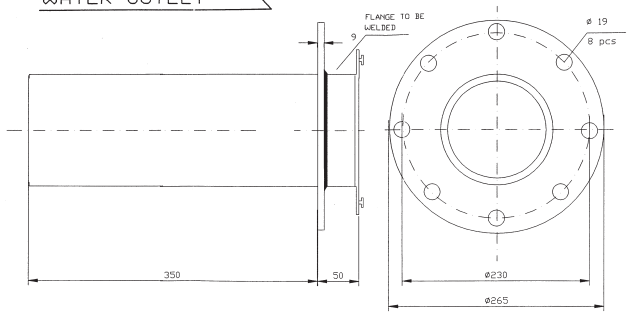

FASTENING TUBE

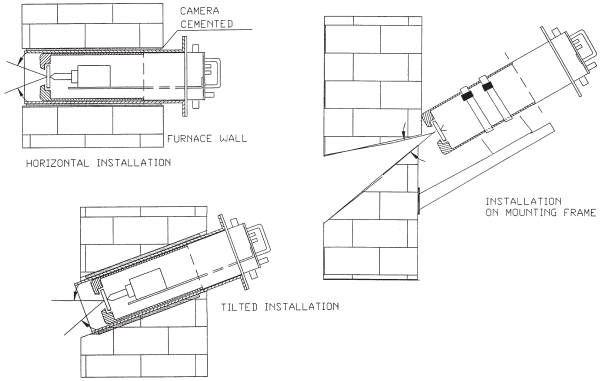

INSTALLATION MODES

CCVE
CLOSE CIRCUIT VIDEO EQUIPMENT
SVENSKA AB

FAX: +46-26647781 TEL: +46-26141814 E-MAIL: fredrik@ccve.se ADDRESS: BOX 6069, 800 06 GÄVLE WWW.CCVE.SE